PIER 5 SINKHOLE AND SHEETPILE REPAIRS - PHASE 2

DRAWING LIST	
SHEET NUMBER	SHEET TITLE
1	TITLE
2	PROJECT NOTES
3	OVERALL SITE PLAN
4	PIER 5 SITE PLAN
5	ELEVATIONS FOR NORTH SIDE
6	VOID 1 PLAN AND CROSS SECTIONS
7	VOID 2 PLAN AND CROSS SECTION
8	VOID 3 PLAN AND CROSS SECTION
9	TYPICAL REPAIR CROSS SECTIONS
10	REPAIR DETAILS

PROJECT LOCATION:

PIER 5 BROADWAY MARINE TERMINAL
2570 BROADWAY
CAMDEN, NJ 08104

OWNER:

SOUTH JERSEY PORT
CORPORATION
TWO AQUARIUM DRIVE, SUITE 100
CAMDEN, NJ 08103

VICINITY MAP
ARTHUR KILL, NY, NJ
USGS QUAD MAPS
SCALE: 1" = 2,000'

SITE MAP
SCALE: 1" = 1000'

ISSUE FOR BID
NOT FOR CONSTRUCTION

No.	DATE	DESCRIPTION	APPROVED B

PROJECT: PIER 5 SINKHOLE AND SHEETPILE REPAIRS - PHASE 2
DRAWING TITLE: TITLE
OWNER/APPLICANT: SOUTH JERSEY PORT CORPORATION, TWO AQUARIUM DRIVE, SUITE 100, CAMDEN, NJ 08103
PROJECT LOCATION: PIER 5 BROADWAY MARINE TERMINAL, 2570 BROADWAY, CAMDEN, NJ 08104

PROJECT No. SJP-2401
DRAWN BY: HJR
CHECKED BY: WRG
DATE: 1/17/2025

STATE OF NEW JERSEY
WILLIAM R. HERRON
No. GE56546
1/17/2025
Date
Professional Engineer
Professional Signature

MidAtlantic Engineering Partners
20288 Beggs Rd. Suite 300, Mt. Laurel Twp., NJ 08054, 609-914-0476
1971 Highway 34, Suite 201, Wall Township, NJ 07719, 732-223-0666
321 W. State Street, Media, PA 19063, 610-565-0020
26 Washington St., 3rd Floor, Morristown, NJ 07960, 973-718-9800

Copyright © 2024 MidAtlantic Engineering Partners, LLC

SHEET IDENTIFICATION
G101
SHEET 1 OF 11

File Name: G:\South Jersey Port Corporation\JOBS\SJP-2401 - Berth 5 Sinkholes\MARINE\DWG\Cover Page.dwg

PROJECT NOTES

DESIGN CRITERIA

1. TIDAL DATUM INFORMATION IS TAKEN FROM BENCHMARK SHEET FOR STATION ID 8545240, PHILADELPHIA, PA, 12/21/2012, PUBLISHED BY THE U.S. DEPARTMENT OF COMMERCE, NATIONAL OCEAN AND ATMOSPHERIC ADMINISTRATION (NOAA).

ELEVATION OF TIDAL DATUM (STATION 851910, REEDY POINT, DE)	
MEAN HIGHER-HIGH WATER (MHHW)	+6.50
MEAN HIGH WATER (MHW)	+6.10
NAVD 88	+2.91
MEAN LOW WATER (MLW)	0.00
MEAN LOWER LOW WATER (MLLW)	-0.19

2. THE STRUCTURES HAVE BEEN DESIGNED TO BE SELF-SUPPORTING AND STABLE AFTER CONSTRUCTION IS COMPLETE. THE STABILITY OF THE STRUCTURES PRIOR TO COMPLETION IS SOLELY THE RESPONSIBILITY OF THE CONTRACTOR. THIS RESPONSIBILITY EXTENDS TO RELATED ASPECTS OF THE CONSTRUCTION ACTIVITY INCLUDING, BUT NOT LIMITED TO, ERECTION METHODS, ERECTION SEQUENCE, CONNECTIONS, TEMPORARY BRACING, FORMS, SHORING, USE OF EQUIPMENT, AND SIMILAR CONSTRUCTION PROCEDURES. REVIEW OF CONSTRUCTION BY THE OWNER AND ENGINEER OF RECORD IS FOR GENERAL CONFORMANCE WITH THE CONTRACT DOCUMENTS ONLY. LACK OF COMMENT BY THE OWNER AND ENGINEER OF RECORD WITH REGARD TO CONSTRUCTION PROCEDURES SHALL NOT BE INTERPRETED AS APPROVAL OR ACCEPTANCE OF SUCH PROCEDURES.

GENERAL CONDITIONS

1. NO GUARANTEE TO THE ACCURACY OF THE REFERENCE DOCUMENTS IS PROVIDED HEREIN AND THE CONTRACTOR SHALL RELY ON HIS OWN FIELD VERIFICATION FOR ITEMS SO REQUIRED.
2. SECTIONS, DETAILS, NOTES, DIMENSIONS AND CONDITIONS ARE APPLICABLE AT ANY OTHER LOCATION WHERE CONDITIONS AND DETAIL ARE SIMILAR BUT ARE NOT SPECIFICALLY NOTED AS SUCH OR ARE NOT SHOWN.
3. THE CONTRACTOR SHALL PERFORM THE WORK IN A MANNER THAT DOES NOT IMPEDE THE OWNER'S OPERATIONS ON SITE OR THE OWNER'S ON SITE OPERATING EQUIPMENT.
4. THE CONTRACTOR PRIOR TO CONSTRUCTION AND FABRICATION OF CONSTRUCTION MATERIALS SHALL VERIFY EXISTING CONDITIONS AND DIMENSIONS.
5. IF, DURING THE PERFORMANCE OF THE WORK, THE CONTRACTOR FINDS A CONFLICT, ERROR, OR DISCREPANCY IN THE CONTRACT DOCUMENTS, THE CONTRACTOR SHALL SO REPORT TO THE ENGINEER OF RECORD IN WRITING AT ONCE. BEFORE PROCEEDING WITH THE WORK AFFECTED THEREBY, THE CONTRACTOR SHALL OBTAIN A WRITTEN INTERPRETATION OR CLARIFICATION FROM THE ENGINEER OF RECORD. WORK DONE BEFORE THE ENGINEER OF RECORD RENDERS HIS DECISION IS AT THE CONTRACTOR'S SOLE RISK.
6. THE WORK SHALL BE PERFORMED IN A GENERAL SEQUENCE DEVELOPED BY THE CONTRACTOR AND SUBMITTED TO THE ENGINEER OF RECORD FOR REVIEW, IN ACCORDANCE WITH THE REQUIREMENTS OF THE CONTRACT. THE CONTRACTOR IS SOLELY RESPONSIBLE FOR THE MEANS AND METHODS OF CONSTRUCTION AND FOR THE SEQUENCES AND PROCEDURES TO BE USED.
7. THE CONTRACTOR SHALL FURNISH AND COORDINATE PLANT, LABOR, SUPERVISION, MATERIALS, EQUIPMENT AND APPLIANCES FOR DEMOLITION AND/OR CONSTRUCTION WORK IN CONNECTION WITH THE DEMOLITION AND/OR CONSTRUCTION OF THE REPAIRS.
8. THE CONTRACTOR WILL INDEMNIFY AND SAVE HARMLESS THE OWNER AND ENGINEER OF RECORD FROM AND AGAINST ALL LOSSES AND ALL CLAIMS, DEMANDS, PAYMENTS, SUITS, ACTIONS, RECOVERIES, AND JUDGMENTS OF EVERY NATURE AND DESCRIPTION BROUGHT OR RECOVERED AGAINST THE OWNER AND ENGINEER OF RECORD BY REASON OF ANY ACT OR OMISSION OF THE CONTRACTOR, OR OF ANY SUBCONTRACTOR TO THE CONTRACTOR, OR OF ANY PERSON DIRECTLY OR INDIRECTLY EMPLOYED BY THE CONTRACTOR OR ANY SUCH SUBCONTRACTOR, IN THE PERFORMANCE OF ANY WORK FOR, OR THE RENDERING OF ANY SERVICES TO, THE OWNER.
9. THE CONTRACTOR AGREES THAT, AT ITS OWN COST AND EXPENSE, IT SHALL PROCURE AND CONTINUE IN FORCE; INSURANCE COVERAGE AS REQUIRED BY THE OWNER. SUCH INSURANCE SHALL BE WRITTEN BY A COMPANY OR COMPANIES AUTHORIZED TO ENGAGE IN THE BUSINESS OF GENERAL LIABILITY INSURANCE IN THE STATE IN WHICH THE DEMISED PREMISES ARE LOCATED, AND THERE SHALL BE DELIVERED TO THE OWNER WITH THE BID CUSTOMARY CERTIFICATES EVIDENCING SUCH PAID-UP INSURANCE, WHICH CERTIFICATES ARE TO BE ISSUED BY THE INSURANCE COMPANIES. GOOD AND RESPONSIBLE COMPANIES, REASONABLY ACCEPTABLE TO THE OWNER, SHALL WRITE SUCH INSURANCE.
10. THE CONTRACTOR SHALL BE SOLELY RESPONSIBLE FOR THE ACCURACY OF LOCATIONS, DIMENSIONS, AND LEVELS AND NO PLEA AS TO INSTRUCTIONS OR ORDER RECEIVED FROM OTHER SOURCES OTHER THAN INFORMATION CONTAINED ON CONTRACT DRAWINGS, SPECIFICATIONS OR IN WRITTEN ORDERS OF THE OWNER OR ENGINEER OF RECORD SHALL JUSTIFY DEPARTURE FROM THE DIMENSIONS AND ELEVATIONS REQUIRED BY THE CONTRACT DRAWINGS.
11. THE CONTRACTOR SHALL TAKE HIS OWN MEASUREMENTS AT THE SITE, VERIFYING THE SAME WITH THE CONTRACT DRAWINGS AND EXISTING FACILITIES, AND WILL BE HELD RESPONSIBLE FOR THE PROPER FIT AND ALIGNMENT OF COMPLETED WORK IN POSITION.
12. THE CONTRACTOR SHALL GUARANTEE TO THE OWNER MATERIALS AND WORKMANSHIP AGAINST ORIGINAL DEFECTS, OR AGAINST INJURY FROM PROPER AND USUAL WEAR WHEN USED FOR THE PURPOSE INTENDED, FOR TWELVE (12) MONTHS AFTER DATE OF FINAL PAYMENT CERTIFICATIONS, AND SHALL MAINTAIN ITEMS IN PERFECT CONDITION DURING THE PERIOD OF GUARANTEE. DEFECTS APPEARING DURING THE PERIOD OF GUARANTEE SHALL BE MADE GOOD BY THE CONTRACTOR AT HIS EXPENSE UPON DEMAND OF THE OWNER, IT BEING REQUIRED THAT WORK SHALL BE IN PERFECT CONDITION WHEN THE PERIOD OF GUARANTEE SHALL HAVE ELAPSED. IN THE EVENT OF DEFAULT BY THE CONTRACTOR, THE COMPANY SHALL HAVE THE RIGHT TO MAKE GOOD DEFECTS AND BILL THE CONTRACTOR COST PLUS 15% FOR ADMINISTRATION FEES.
13. AT THE CONTRACTOR'S EXPENSE, THE CONTRACTOR'S WORKING AREAS SHALL BE CLEANED BY HIM ON A DAY-TO-DAY BASIS, WITH RUBBISH REMOVED FROM THE SITE AND WORK AREAS CLEANED AT THE END OF EACH DAY. AT FINAL COMPLETION OF WORK THE CONTRACTOR SHALL LEAVE THE ENTIRE PREMISES, WITHIN THE SITE OF HIS OPERATIONS, CLEAN AND FREE FROM THE RUBBISH RESULTING FROM HIS CONSTRUCTION OPERATIONS.
14. THE CONTRACTOR IS RESPONSIBLE TO PROVIDE AND MAINTAIN UTILITIES HE DEEMS NECESSARY TO AFFECT THE WORK.
15. THE CONTRACTOR SHALL PROVIDE FIELD ENGINEERING SERVICES REQUIRED FOR PROPER COMPLETION OF THE WORK INCLUDING, BUT NOT NECESSARILY LIMITED TO: ESTABLISHING AND MAINTAINING LINES AND LEVELS; STRUCTURAL DESIGN OF SHORES, FORMS, AND SIMILAR ITEMS PROVIDED BY THE CONTRACTOR AS PART OF HIS MEANS AND METHODS OF CONSTRUCTION.
16. THE CONTRACTOR SHALL PROVIDE AND MAINTAIN AT HIS EXPENSE REQUIRED FIRE PROTECTION SYSTEMS AND DEVICES AS NECESSARY TO SAFELY PERFORM THE WORK IN ACCORD WITH THE APPLICABLE REGULATIONS. IT SHALL BE OPERATIONAL THROUGHOUT THE PERIOD OF CONSTRUCTION.
17. THE OWNER SHALL HAVE THE RIGHT TO WITHHOLD WITHOUT PENALTY PAYMENT DESCRIBED ABOVE, OR SECTIONS REFERENCED HEREIN, FOR COMPLETED WORK SHOULD THE CONTRACTOR FAIL TO MEET OBLIGATIONS OR REQUIREMENTS OF THE CONTRACT. WITHHELD PAYMENT SHALL BE PROMPTLY MADE UPON THE CONTRACTOR'S FULL COMPLIANCE WITH THE CONTRACT.
18. COMPLY WITH LOCAL, STATE, AND FEDERAL REQUIREMENTS FOR PROTECTION OF THE ENVIRONMENT DURING THE WORK. NO LATER THAN 21 DAYS FOLLOWING AWARD OF CONTRACT, SUBMIT A COMPREHENSIVE PLAN DESCRIBING THE MEANS AND METHODS TO BE EMPLOYED FOR PROTECTION, CONTAINMENT, AND CLEAN UP. ENSURE THAT PERSONNEL ARE PROPERLY TRAINED AND THAT SUFFICIENT EQUIPMENT AND MATERIALS ARE READILY AVAILABLE FOR USE IF REQUIRED. ABIDE BY STATE AND FEDERAL SPILL REPORTING REQUIREMENTS.
19. THE OWNER RESERVES THE RIGHT TO CHARGE THE CONTRACTOR FOR ADDITIONAL ENGINEERING SERVICES IF REQUIRED DUE TO THE CONTRACTOR'S ACTIONS OR INACTIONS.
20. THE CONTRACTOR IS SOLELY RESPONSIBLE FOR THE SAFETY OF HIS OPERATIONS. THE CONTRACTOR SHALL TAKE REASONABLE PRECAUTIONS FOR THE SAFETY OF, AND SHALL PROVIDE REASONABLE PROTECTION TO PREVENT DAMAGE, INJURY, OR LOSS TO PERSONS EMPLOYED BY THE CONTRACTOR IN PERFORMANCE OF THE WORK, AND PERSONS NEARBY THAT MAY BE AFFECTED BY THE CONTRACTOR'S OPERATIONS OR THE WORK, INCLUDING EQUIPMENT AND MATERIALS WHICH WILL BE INCORPORATED IN THE WORK, AND OTHER PROPERTIES AND STRUCTURES AT THE SITE, OR ON ADJACENT PROPERTIES.
21. OBSTRUCTIONS ARE DEFINED AS UNFORESEEN OBJECTS, WHICH IMPEDE PROGRESS. OBJECTS, WHICH ARE MADE KNOWN TO THE CONTRACTOR, WILL NOT BE CONSIDERED TO BE OBSTRUCTIONS. NOTIFY THE ENGINEER OF RECORD IMMEDIATELY UPON ENCOUNTERING UNFORESEEN OBJECTS. NO CONSIDERATION WILL BE GIVEN FOR ADDITIONAL COMPENSATION ON THIS ACCOUNT WITHOUT THIS TIMELY NOTIFICATION.
22. SUBSTITUTIONS MAY BE FURNISHED FOR MATERIALS SPECIFIED HEREIN PROVIDED THE CONTRACTOR SECURES ACCEPTANCE FROM THE ENGINEER OF RECORD.

SELECTIVE DEMOLITION AND DISPOSAL

1. THE CONTRACTOR SHALL REMOVE AND DISPOSE ALL STEEL MATERIALS LABELED FOR DEMOLITION IN THE CONTRACT DOCUMENTS. THIS WORK INCLUDES BUT IS NOT LIMITED TO, IMPRESSED CURRENT BAR, ASPHALT AND BACKFILL.

TEMPORARY WORK

1. LABOR, EQUIPMENT, AND MATERIALS REQUIRED TO PERFORM THE WORK THAT, UPON COMPLETION, ARE NOT A PART OF THE WORK, SHALL BE FURNISHED, INSTALLED, AND SUBSEQUENTLY REMOVED FROM THE SITE BY THE CONTRACTOR.
2. TEMPORARY WORK SHALL BE SUBJECT TO THE REQUIREMENTS OF THE STATE AND APPLICABLE LOCAL BUILDING CODES.
3. THE CONTRACTOR SHALL SAFEGUARD AND PROTECT EXCAVATIONS.
4. DURING EXECUTION OF THE WORK, THE CONTRACTOR IS REQUIRED TO INSTALL AND MAINTAIN REQUIRED SEDIMENTATION AND EROSION CONTROL MEASURES TO PROTECT ADJACENT WATERWAYS. MEASURES INCLUDE BUT ARE NOT LIMITED TO TEMPORARY BERMS, CONTAINMENT BOOMS, AND TURBIDITY CURTAINS. IN ACCORDANCE WITH STATE REGULATORY AUTHORIZATIONS, THE CONTRACTOR SHALL FURNISH, INSTALL, MAINTAIN TEMPORARY TURBIDITY CURTAINS DURING CONSTRUCTION. TEMPORARY MATERIALS AND EQUIPMENT SHALL CONFORM TO REQUIREMENTS FOR TEMPORARY WORK.

STRUCTURAL STEEL

1. WELDING SHALL CONFORM TO THE "STRUCTURAL WELDING CODE - STEEL," AS ADOPTED BY THE AMERICAN WELDING SOCIETY (AWS D1.1). A WELDER CERTIFIED IN ACCORDANCE WITH AWS STANDARDS SHALL PERFORM ALL WELDING.
2. UNDERWATER WELDS ARE TO BE PERFORMED BY WELDERS WITH A MINIMUM OF FIVE (5) YEARS EXPERIENCE PERFORMING UNDERWATER WELDS OF THE SPECIFIED TYPES AND SIZES. CONTRACTOR IS TO SUBMIT WELDER QUALIFICATIONS TO THE ENGINEER OF RECORD FOR APPROVAL.
3. WELDING ELECTRODES SHALL BE E70XX AND COMPLY WITH AWS A5.1 AND AWS a5.5.
4. DESIGN FABRICATION, AND ERECTION OF STRUCTURAL STEEL SHALL CONFORM TO THE "MANUAL OF STEEL ERECTION - LRFD," 15TH EDITION AS ADOPTED BY THE AMERICAN INSTITUTE OF STEEL CONSTRUCTION.
5. STEEL SECTIONS SHALL CONFORM TO THE FOLLOWING REQUIREMENTS:
   PLATES:ASTM A572, Fy=50 KSI
   ANGLES:ASTM A572, Fy=50 KSI
6. UNLESS OTHERWISE NOTED IN DESIGN DOCUMENTS, STEEL PLATES SHALL BE EPOXY COATED.
7. WELDS TO BE COATED WITH DENSO SEASHIELD SZ UNDERWATER EPOXY OR ENGINEER OF RECORD APPROVED EQUIVALENT. APPLICATION OF THE EPOXY IS TO BE IN CONFORMATION WITH THE MANUFACTURES SPECIFICATIONS.

PROTECTIVE COATING

1. MATERIAL USED FOR FACTORY EPOXY COATING OF ALL SCHEDULED SURFACES SHALL BE BAR-RUST 235 MULTI-PURPOSE EPOXY COATING AS MANUFACTURED BY DEVOE COATINGS OR EQUIVALENT ACCEPTED BY THE ENGINEER OF RECORD.
2. FIELD TOUCH-UP COATING SHALL BE IDENTICAL TO FACTORY COATING AND APPLIED IN ACCORDANCE WITH MANUFACTURERS REQUIREMENTS.
3. PROTECTIVE COATING TOP COAT SHALL BE BLACK UNLESS OTHERWISE INDICATED ON THE DRAWINGS OR BY THE OWNER.
4. SURFACES SHALL BE PREPARED IN STRICT ACCORDANCE WITH THE PROTECTIVE COATING SYSTEM MANUFACTURER'S WRITTEN INSTRUCTIONS.
5. THE PROTECTIVE COATING SHALL BE INSTALLED IN STRICT ACCORDANCE WITH MANUFACTURER'S WRITTEN INSTRUCTIONS. COATING IS TO BE APPLIED IN TOW COATS TO ACHIEVE AN OVERALL DRY FILM THICKNESS OF 15 MILS.
6. ALL HOLIDAYS OR OTHER IMPERFECTIONS IN THE COATING SHALL BE REMOVED OR REPAIRED AT THE CONTRACTOR'S EXPENSE PRIOR TO FINAL ACCEPTANCE OF THE WORK.

NON-SHRINK GROUT

1. NON-SHRINK GROUT SHALL BE A NON-SHRINK, NON-METALLIC CEMENTITIOUS GROUT, CONFORMING TO ASTM C827 AND SHALL HAVE A 28-DAY COMPRESSIVE STRENGTH OF 5000 PSI IN THE FLOWABLE STATE. GROUT PRODUCT MUST BE SUITABLE FOR SUBMERGED/UNDERWATER APPLICATIONS.

CONTROLLED LOW STRENGTH MATERIAL (CLSM)

1. CONTROLLED LOW STRENGTH MATERIAL (CLSM), FILL SHALL HAVE A MINIMUM WET DENSITY OF 90 POUNDS PER CUBIC FOOT (PCF) AND A MAXIMUM WET DENSITY OF 110 PCF.
2. CSLM FILL SHALL HAVE A MINIMUM 28-DAY COMPRESSIVE STRENGTH OF 100 PSI AND NOT TO EXCEED 200 PSI.
3. CSLM FILL SHALL HAVE A SLUMP OF 8 TO 11 INCHES.
4. CLSM FILL SHALL CONTAIN 15% TO 20% ENTRAINED AIR. AIR ENTRAINMENT ADMIXTURE SHALL BE DARAFILL AS MANUFACTURED BY W.R. GRACE & CO. OR EQUIVALENT.

AGGREGATE

1. FILL IS TO BE AASHTO No. 57 STONE.
2. THE SUB-BASE IS TO BE NJDOT APPROVED DENSE GRADED AGGREGATE (DGA)
3. ASPHALT IS TO BE NJDOT I-4 MIX.
4. ALL AGGREGATES TO BE PLACED AND COMPACTED IF APPLICABLE IN ACCORDANCE WITH NJDOT SPECIFICATIONS.

SUBMITTALS

1. THE CONTRACTOR SHALL MAKE THE FOLLOWING SUBMITTALS IN ELECTRONIC FORMAT TO THE ENGINEER OF RECORD:

   A. WORK SCHEDULE - SUBMIT A WORK SCHEDULE: THE WORK SCHEDULE SHALL INDICATE THE START AND END DATES OF ALL WORK ELEMENTS. THE SCHEDULE SHALL INCORPORATE COORDINATION ACTIVITIES AS MAY BE REQUIRED. THE SCHEDULE SHALL INDICATE CRITICAL PATH ELEMENTS, AND SHALL ANTICIPATE REVIEW PERIODS FOR SUBMITTALS, RE-SUBMITTALS, AND POTENTIAL DELAYS OR POSSIBLE INTERRUPTION IN WORK SUCH AS "WEATHER DAYS".

   B. STAGING AND SEQUENCING PLAN - SUBMIT A STAGING PLAN WHICH SHALL INDICATE STAGING AREAS, STORAGE AREA, PROTECTION OF MATERIALS, TEMPORARY ENVIRONMENTAL CONTROLS, EQUIPMENT, WORK SEQUENCING, MAINTENANCE AND PROTECTION OF THE PUBLIC AND TRAFFIC, LABOR AND EQUIPMENT FORCE NEEDED FOR THE TOPSIDE WORK, DEMOLITION PROCEDURES, AND MEANS AND METHODS OR ANY OTHER WORK ELEMENT AS SPECIFIED.

   C. CONCRETE MIX DESIGN, ADMIXTURES, AND PLACEMENT PROCEDURES - SUBMIT CONCRETE MIX DESIGNS AND ADMIXTURES. ADMIXTURE MANUFACTURER SHALL PROVIDE CERTIFICATIONS AS SPECIFIED. CONTRACTOR SHALL ALSO SUBMIT CONCRETE PLACEMENT/PUMPING PROCEDURES AND EQUIPMENT, FOR APPROVAL BY THE ENGINEER.

   D. PRODUCT DATA, CERTIFICATES, MSDS SHEETS, AND INSPECTION REPORTS - SUBMIT DATA FOR PROPRIETARY MATERIALS OR SYSTEMS INCLUDING STEEL PLATES AND SHAPES, GROUT, CLSM, AGGREGATES, BACKER RODS, ETC. SUBMIT MSDS SHEETS FOR ALL MATERIALS REQUIRING SPECIAL HANDLING OR MATERIALS THAT CONTAIN ORGANICALLY HARMFUL OR HAZARDOUS COMPONENTS.

   E. MATERIAL CERTIFICATES AND TEST REPORTS - SUBMIT DISPOSAL CERTIFICATES AND MATERIALS CERTIFICATES AS SPECIFIED AND AS OTHERWISE REQUESTED BY THE ENGINEER, INCLUDING NAMES, SOURCES, AND DESCRIPTIONS. SUBMIT LABORATORY TEST REPORTS FOR CONCRETE AS SPECIFIED. MATERIAL CERTIFICATES IN LIEU OF MATERIAL LABORATORY TEST REPORTS MAY BE SUBMITTED WHEN PERMITTED BY THE ENGINEER. MATERIAL CERTIFICATES SHALL BE SIGNED BY MANUFACTURER AND CONTRACTOR, CERTIFYING THAT EACH MATERIAL ITEM COMPLIES WITH, OR EXCEEDS, THE SPECIFIED REQUIREMENTS.

2. ALL SUBMITTALS SHALL CONTAIN INFORMATION PERTAINING TO THE PROJECT INCLUDING TITLE, DATE, SHEET NOS. SCALES, MATERIALS, PRODUCTS, SYSTEMS, AND ANY OTHER RELEVANT INFORMATION SPECIFIC TO THE ITEM OF WORK COVERED UNDER THE SUBMITTAL.
3. ALL PLAN SETS INCLUDE THE ANALYTICAL RESULTS IN STANDARD DELIVERABLES FORMAT OF THE SOIL CONTAMINATION AT THE PROJECT SITE.

ESTIMATED BID QUANTITIES

PIER 5

Material	Unit of Measure	Quantity per Location			
		Cell 3N	Cell 2N	Cell 1N/5	Cell 2S
Steel Plate Repairs	LF	14	40	40	41
Saw Cutting	LF	43	16	16	0
Controlled Low-Strength Material (CLSM)	CF	210	25	25	0
AASHTO No. 57 Stone	CF	220	40	40	0
Dense Graded Aggregate (DGA)	CF	88	16	16	0
NJDOT I-4 Ashalpt	SF	88	16	16	0

PROPOSED FILL

1. FOR GENERAL NOTES SEE SHEET 2.
2. CLEAN SSP OF CELL IN THE FOOTPRINT OF REPAIRS. CLEAN ALL EXPOSED SURFACES OF MARINE GROWTH, SCALING AND CORROSION USING APPROPRIATE CLEANING EQUIPMENT.
3. IMMEDIATELY PRIOR TO WELDING, THOROUGHLY CLEAN NEW AND EXISTING STEEL SURFACE RECEIVING WELDS OF ALL FOREIGN MATTER INCLUDING MARINE GROWTH, SEDIMENTS, COATINGS, RUST, OIL AND LOOSE MATERIAL FOR A MINIMUM DISTANCE OF 3" ON EACH SIDE OF THE WELD.
4. THE EXISTING CELL IS DETERIORATED. SIGNIFICANT BULGING AND LEANING IS POSSIBLE IN THE EXISTING SSP. STEEL PLATE AND ANGLES SHALL BE FIELD MEASURED AND FIELD TRIMMED TO CONFORM TO CELL HORIZONTAL AND VERTICAL CURVATURE.
5. CONTRACTOR TO REVIEW FIELD CONDITIONS PRIOR TO PROCUREMENT OF MATERIALS. PROCURED QUANTITY AND SIZE OF MATERIAL SHALL BE IN CONSIDERATION OF FIELD CONDITIONS.
6. EXTENT OF VOID MAY EXCEED WHAT IS SHOWN ON THE DRAWING.
7. ANY CORROSION HOLE THAT IS GREATER THAN 5" DIA. MUST TO BE PLUGGED PRIOR TO PLATE INSTALLATION.
8. IF NECESSARY TO REMOVE CONCRETE, REPLACE WITH MINIMUM 4000 PSI CONCRETE TO THE ORIGINAL DIMENSIONS.
9. SUSPECTED VOIDS BELOW THE ASPHALT ARE TO BE FILLED AS FOLLOWS:

A. BOTTOM OF VOID TO 4' TO THE TOP OF THE ASPHALT - CONTROLLED LOW-STRENGTH MATERIAL (CLSM)
B. 4' TO 1.5' TO THE TOP OF THE ASPHALT - AASHTO NO. 57 STONE
B. 1.5' TO 0.5' TO THE TOP OF THE ASPHALT - DENSE GRADED AGGREGATE (DGA)
C. 0.5' TO 0" TO THE TOP OF THE ASPHALT - NJDOT I-4 ASPHALT

PROPOSED REPAIR

1. IMPRESSED CURRENT BAR TO BE REMOVED AS NECESSARY TO INSTALL 6X6X1/2 ANGLES.
2. STEEL ANGLES ARE TO BE UNCOATED.
3. CONTRACTOR TO POWER WASH ALL SURFACES PRIOR TO INSTALLATION OF REPAIR TO ENSURE SUFFICIENT BOND WITH GROUT.
4. CONTRACTOR MUST TACK WELD VERTICAL PLATES AND ANGLES TO HORIZONTAL L4X4 AS NECESSARY TO PREVENT KICK OUT DURING GROUT FILL

ISSUE FOR BID
NOT FOR CONSTRUCTION

No.	DATE	DESCRIPTION	APPROVED B
-			
-			
-			
-			
-			
-			

PROJECT: PIER 5 SINKHOLE AND SHEETPILE REPAIRS - PHASE 2
DRAWING TITLE: PROJECT NOTES
OWNER/APPLICANT: SOUTH JERSEY PORT CORPORATION, TWO AQUARIUM DRIVE, SUITE 100, CAMDEN, NJ 08103
PROJECT LOCATION: PIER 5 BROADWAY MARINE TERMINAL, 2570 BROADWAY, CAMDEN, NJ 08104

PROJECT No: SJP-2401
DRAWN BY: HJR
CHECKED BY: WRL
DATE: 1/17/2025

NEW JERSEY LICENSED PROFESSIONAL ENGINEER, WILLIAM R. HERROW, No. 45658, Date 1/17/2025, Professional Engineer Signature

MidAtlantic Engineering Partners
20298 Briggs Rd. Suite 300, Mt. Laurel No, NJ 08054, 609-914-1663
1911 Highway 34, Suite 201, Wall Township, NJ 07719, 732-556-1555
321 W. State Street, Suite 201, Media, PA 19063, 610-565-0020
26 Washington St. 3rd Floor, Morristown, NJ 07960, 973-718-9878
Copyright © 2024 MidAtlantic Engineering Partners, LLC.

SHEET IDENTIFICATION
G102
SHEET 2 OF 11

File Name: G:\South Jersey Port Corporation\JOBS\SJP-2401 - Berth 5 Sinkholes\MARINE\DWG\Cover Page.dwg

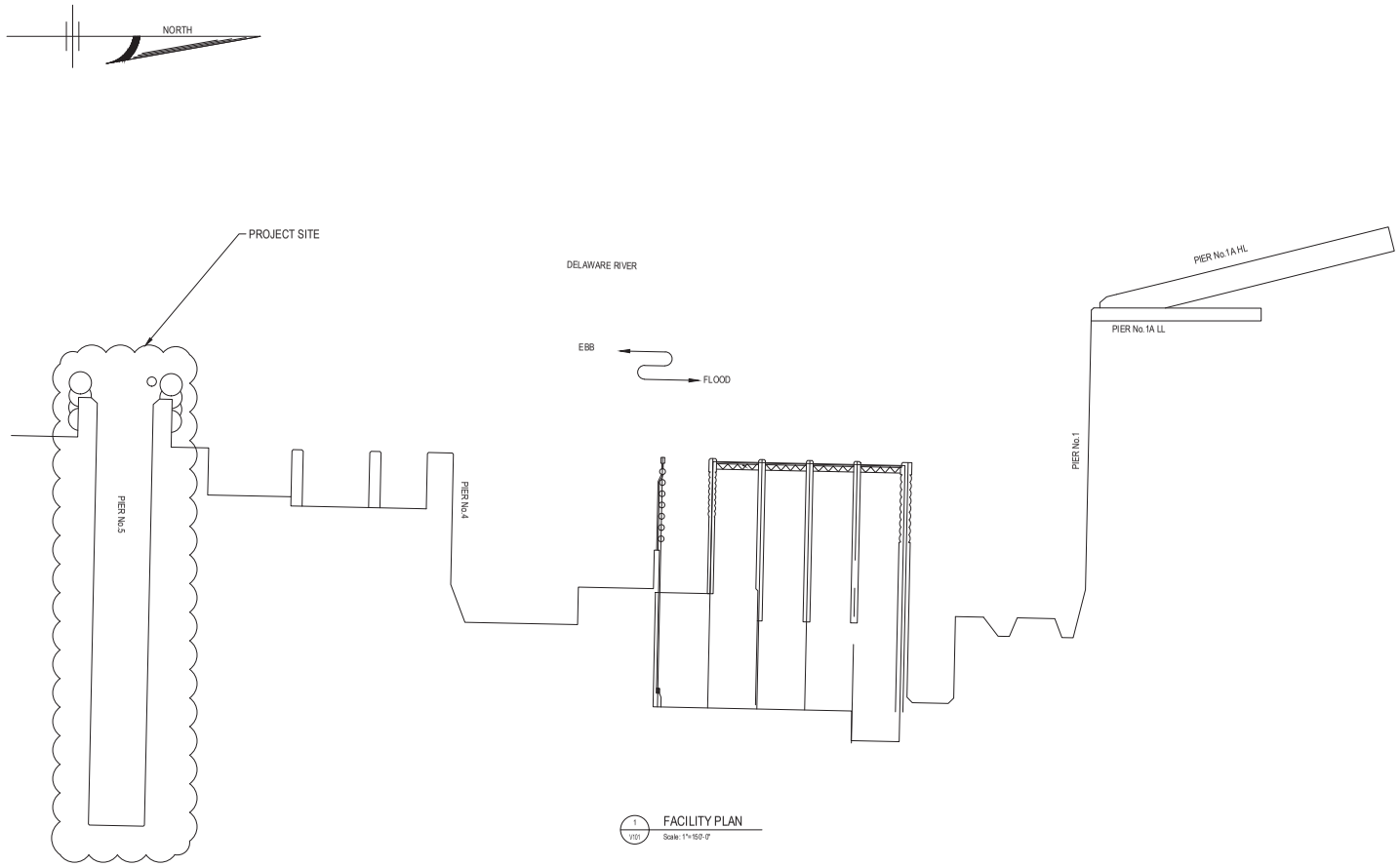

1 / V101 FACILITY PLAN
Scale: 1"=150'-0"

120 60 0 150 300 450
150 90 30
GRAPHIC SCALE
1 inch = 150 feet

ISSUE FOR BID
NOT FOR CONSTRUCTION

No.	DATE	DESCRIPTION	APPROVED B

PROJECT: PIER 5 SINKHOLE AND SHEETPILE REPAIRS - PHASE 2

DRAWING TITLE: OVERALL SITE PLAN

OWNER/APPLICANT: SOUTH JERSEY PORT CORPORATION, TWO AQUARIUM DRIVE, SUITE 100, CAMDEN, NJ 08103

PROJECT LOCATION: PIER 5 BROADWAY MARINE TERMINAL, 2370 BROADWAY, CAMDEN, NJ 08104

PROJECT No. SJP-2401
DRAWN BY: HJR
CHECKED BY: WBL
DATE: 1/17/2025

STATE OF NEW JERSEY, JESSE K. HERROW, No. GE56546, Date 1/17/2025, Professional Engineer

MidAtlantic Engineering Partners
20288 Briggs Rd. Suite 300, Mt. Laurel No, NJ 08054, (609) 917-0400
1571 Highway 34, Suite 201, Wall Township, NJ 07719, (732) 223-0888
321 W. State Street, Media, PA 19063, 610-565-5020
26 Washington St., 3rd Floor, Morristown, NJ 07960, 973-719-9800

Copyright © 2024 MidAtlantic Engineering Partners, LLC

SHEET IDENTIFICATION
V101
SHEET 3 OF 11

File Name: G:\South Jersey Port Corporation\JOBS\SJP-2401 - Berth 5 Sinkhole\MARINE\DWG\Existing and Proposed Repair.dwg

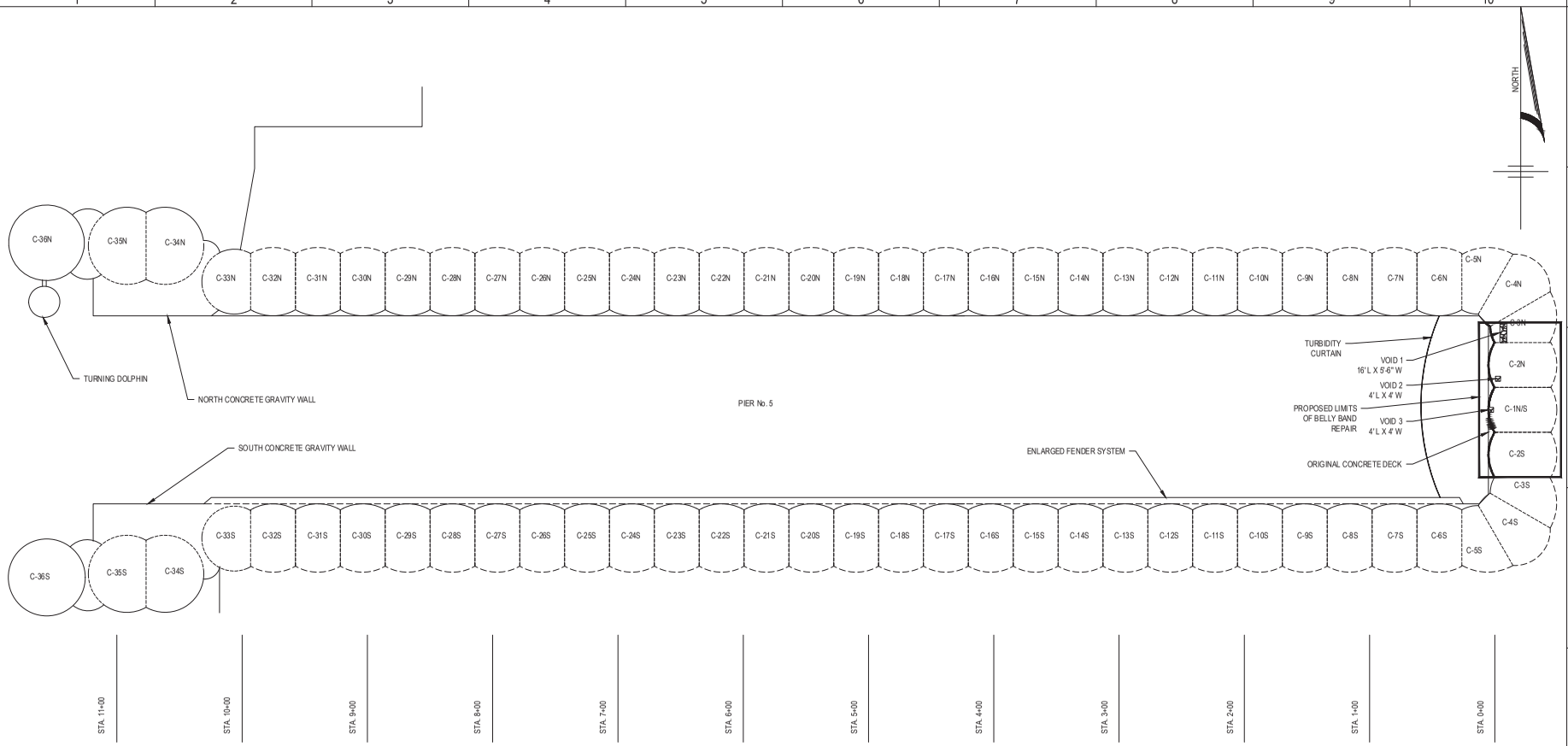

1 / S101 PIER 5 SITE PLAN
Scale: 1"=40'-0"

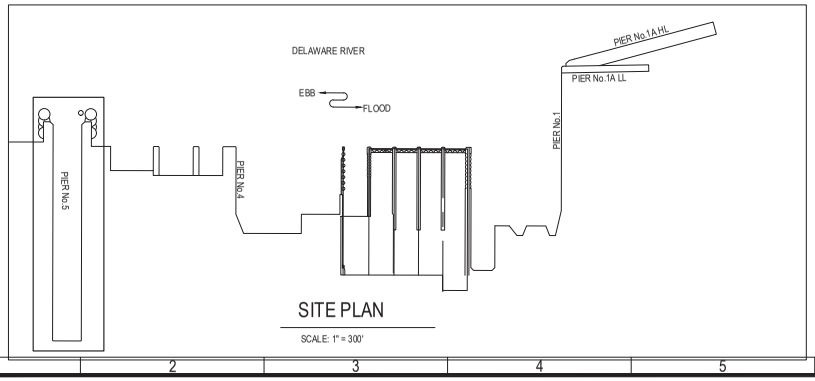

SITE PLAN
SCALE: 1" = 300'

GENERAL NOTES:

1. SITE PLAN DEVELOPED BY REFERENCE DRAWINGS PROVIDED BY S.T. HUDSON AS PART OF THE 2004 INSPECTION REPORT.

GRAPHIC SCALE
1 inch = 40 feet

ISSUE FOR BID
NOT FOR CONSTRUCTION

No.	DATE	DESCRIPTION	APPROVED B
—	—	—	
—	—	—	
—	—	—	
—	—	—	
—	—	—	

PROJECT: PIER 5 SINKHOLE AND SHEETPILE REPAIRS - PHASE 2

DRAWING TITLE: PIER 5 SITE PLAN

PROJECT LOCATION: PIER 5 BROADWAY MARINE TERMINAL, 2570 BROADWAY, CAMDEN, NJ 08104

OWNER/APPLICANT: SOUTH JERSEY PORT CORPORATION, TWO AQUARIUM DRIVE, SUITE 100, CAMDEN, NJ 08103

PROJECT No.: SJP-2401
DRAWN BY: HJR
CHECKED BY: WBL
DATE: 1/17/2025

STATE OF NEW JERSEY
PATRICK K. HERROW
No. GE56595
1/17/2025
Date
Patrick Herrow, P.E.
Principal
Professional Engineer
Registration

MidAtlantic Engineering Partners

1971 Highway 34, Suite 201, Wall Township, NJ 07719, 732-206-0080
20288 Briggs Rd, Suite 300, Mt. Laurel Twp, NJ 08054, 609-914-1500
321 W. State Street, Media, PA 19063, 610-565-0020
26 Washington St., 3rd Floor, Morristown, NJ 07960, 973-718-9800

Copyright © 2024 MidAtlantic Engineering Partners, LLC

SHEET IDENTIFICATION
S101
SHEET 4 OF 11

File Name: G:\South Jersey Port Corporation\JOB\SJP-2401 - Berth 5 Sinkhole\MARINE\DWG\Existing and Proposed Repair.dwg

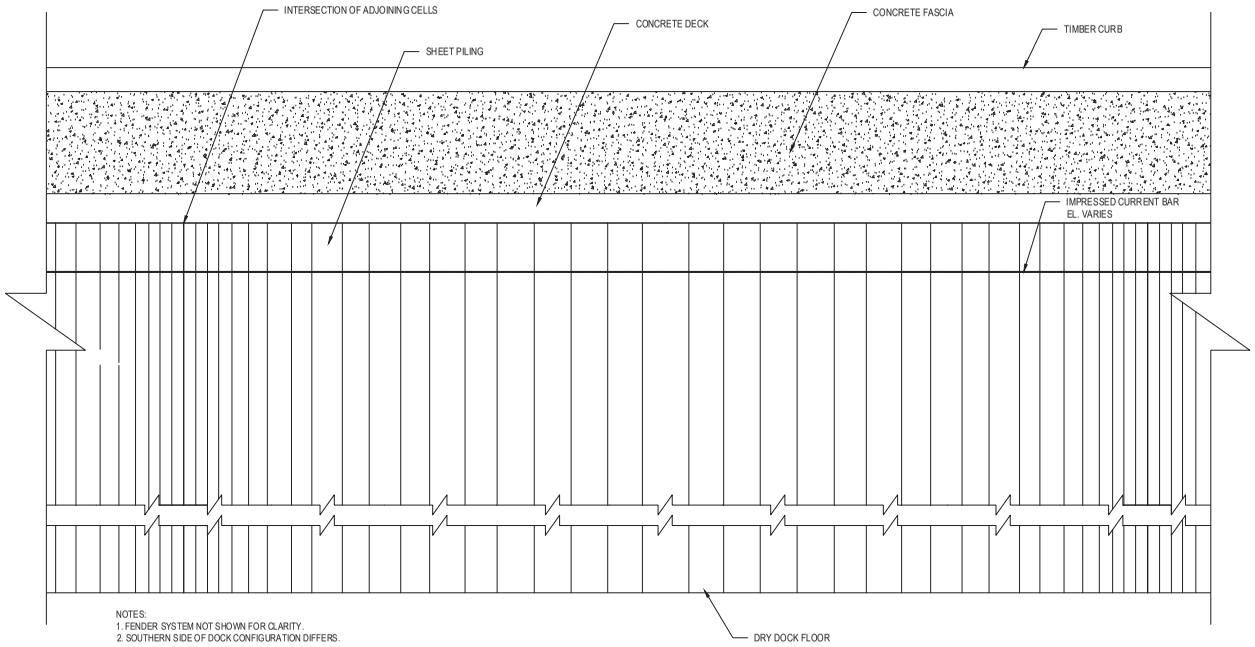

NOTES:
1. FENDER SYSTEM NOT SHOWN FOR CLARITY.
2. SOUTHERN SIDE OF DOCK CONFIGURATION DIFFERS.

1 / S102 TYPICAL PARTIAL ELEVATION
Scale: 1" = 2'

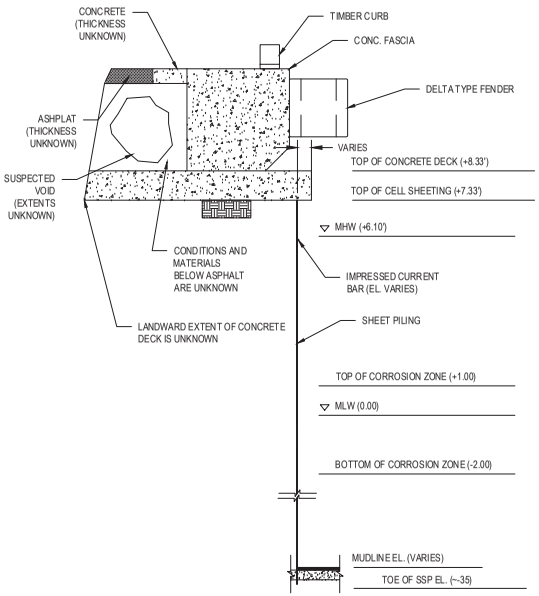

2 / S102 EXISTING SUSPECTED VOID SECTION
Scale: 1" = 2'

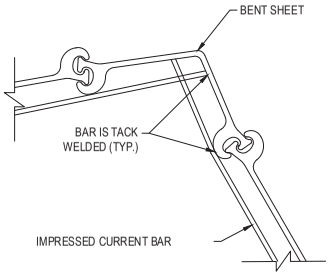

A / S102 ADJOINING CELL DETAIL
Scale: 3" = 1'-0"

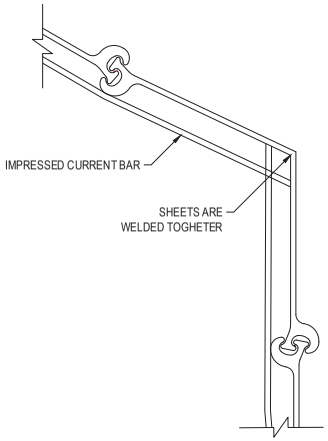

B / S102 ADJOINING CELL DETAIL
Scale: 3" = 1'-0"

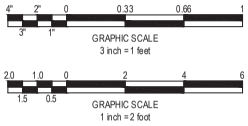

ISSUE FOR BID
NOT FOR CONSTRUCTION

No.	DATE	DESCRIPTION	APPROVED B

PROJECT: PIER 5 SINKHOLE AND SHEETPILE REPAIRS - PHASE 2
DRAWING TITLE: ELEVATIONS FOR NORTH SIDE
PROJECT LOCATION: PIER 5 BROADWAY MARINE TERMINAL, 2370 BROADWAY, CAMDEN, NJ 08104
OWNER/APPLICANT: SOUTH JERSEY PORT CORPORATION, TWO AQUARIUM DRIVE, SUITE 100, CAMDEN, NJ 08103

PROJECT No: SJP-2401
DRAWN BY: HJR
CHECKED BY: WBL
DATE: 1/17/2025

STATE OF NEW JERSEY, WILLIAM K. HERRON, JR., No. GE56595, 1/17/2025, Date
Professional Engineer Signature

MidAtlantic Engineering Partners
1971 Highway 34, Suite 201, Wall Township, NJ 07719, 732-280-0400
20088 Bagg Rd, Suite 300, Mt. Laurel Twp, NJ 08054, 609-910-1400
321 W. State Street, Media, PA 19063, 610-565-0020
26 Washington St, 3rd Floor, Morristown, NJ 07960, 973-717-9000

Copyright © 2024 MidAtlantic Engineering Partners, LLC

SHEET IDENTIFICATION
S102
SHEET 5 OF 11

File Name: G:\South Jersey Port Corporation\JOBS\SJP-2401 - Berth 5 Sinkhole\MARINE\DWG\Existing and Proposed Repair.dwg

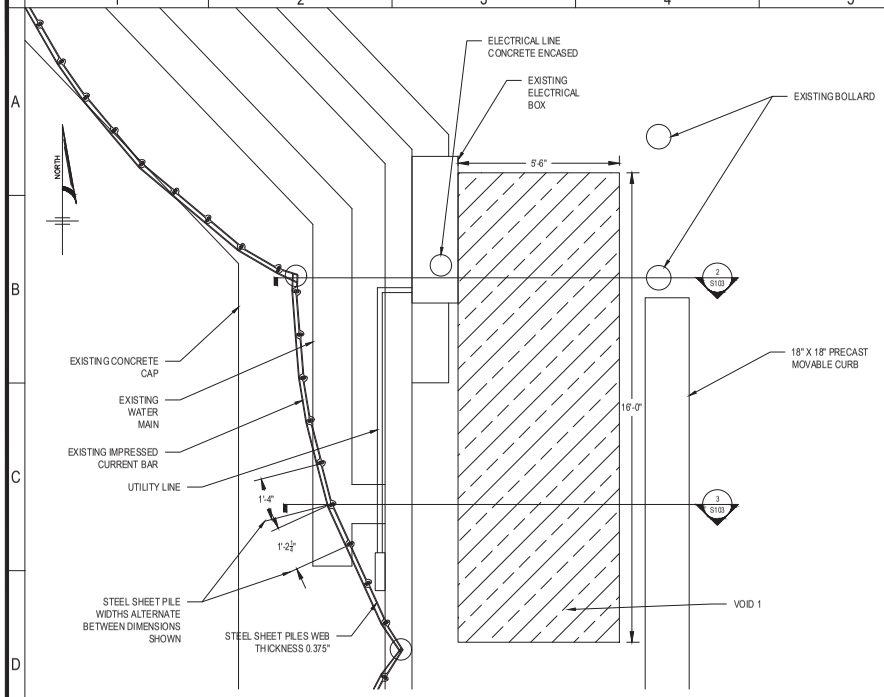

1 S103 VOID 1 PARTIAL PLAN AT C-3N
Scale: 1" = 2'

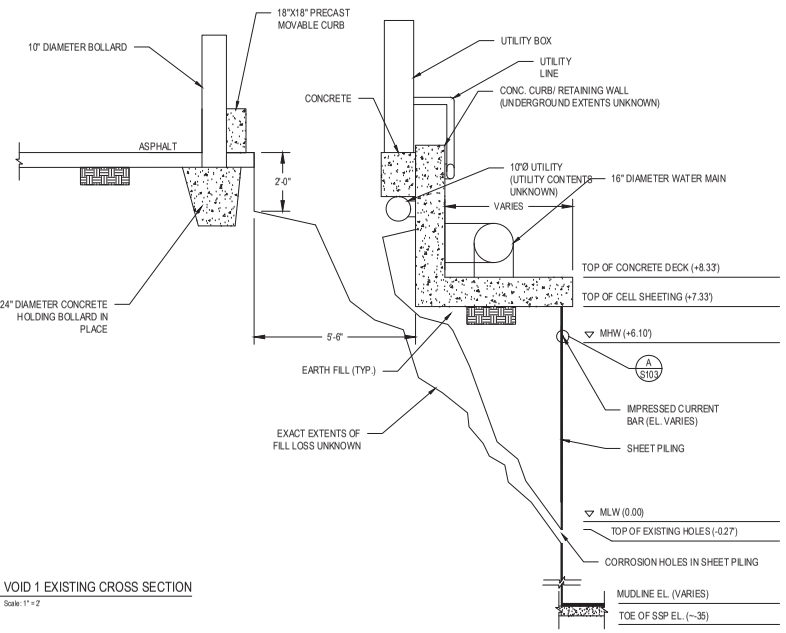

2 S103 VOID 1 EXISTING CROSS SECTION
Scale: 1" = 2'

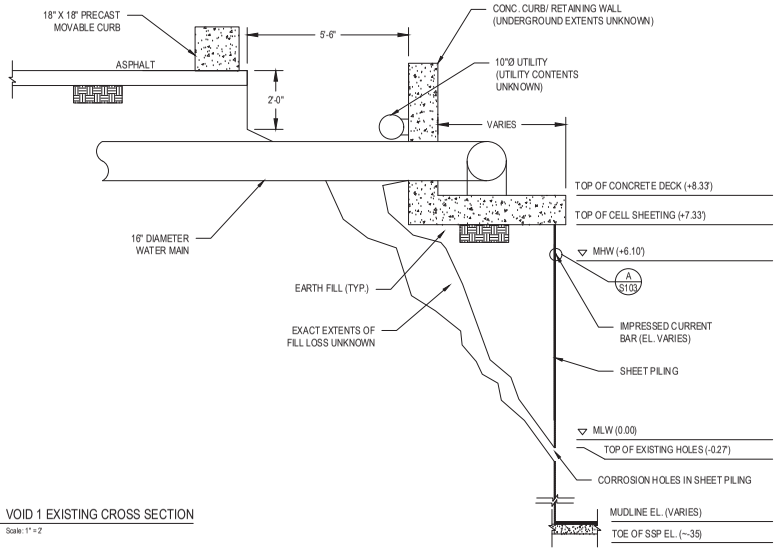

3 S103 VOID 1 EXISTING CROSS SECTION
Scale: 1" = 2'

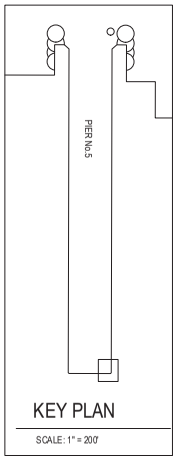

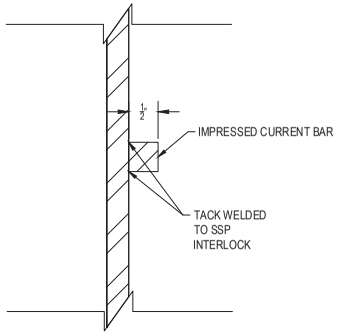

A S103 IMPRESSED CURRENT BAR DETAIL
Scale: 1" = 1'

GRAPHIC SCALE
1 inch = 1 foot

GRAPHIC SCALE
1 inch = 2 foot

NOTES:

1. SINKHOLE SIZE IS BASED ON THE INSPECTION NOTES OBTAINED DURING THE EMERGENCY INSPECTION PERFORMED ON OCTOBER 2024.

GENERAL NOTES

1. SOIL AT THE FACILITY IS KNOWN TO BE CONTAMINATED. THE CONTRACTOR IS RESPONSIBLE TO STOCKPILE, TEST, AND DISPOSE OF EXCAVATED MATERIAL IN ACCORDANCE WITH ENVIRONMENTAL REGULATIONS.
2. BOLLARDS HAVE 2' DIAMETER CONCRETE HOLDING THEM IN PLACE AND WILL NEED TO BE REPLACED TO PROTECT THE UTILITY BOX.

ISSUE FOR BID
NOT FOR CONSTRUCTION

No.	DATE	DESCRIPTION	APPROVED B

PROJECT: PIER 5 SINKHOLE AND SHEETPILE REPAIRS - PHASE 2
DRAWING TITLE: VOID 1 PLAN AND CROSS SECTIONS
PROJECT LOCATION: PIER 5 BROADWAY MARINE TERMINAL 2370 BROADWAY CAMDEN, NJ 08104
OWNER/APPLICANT: SOUTH JERSEY PORT CORPORATION TWO AQUARIUM DRIVE, SUITE 100 CAMDEN, NJ 08103

PROJECT No.: SJP-2401
DRAWN BY: HJR
CHECKED BY: WBL
DATE: 1/17/2025

NEW JERSEY LICENSED PROFESSIONAL ENGINEER
WILLIAM K. HERRON
No. 35635
1/17/2025
Date
PRESSE HERRON PROFESSIONAL ENGINEERING CORPORATION

MidAtlantic Engineering Partners
1971 Highway 34, Suite 201, Wall Township, NJ 07719, 732-223-1566
Mt. Laurel Two, NJ 08054, 856-778-0400
20298 Bragg Rd, Suite 300, Lexington Park, MD 20653
321 W. State Street, Media, PA 19063, 610-565-5020
26 Washington St., 3rd Floor, Morristown, NJ 07960, 973-718-9800
Copyright © 2024 MidAtlantic Engineering Partners, LLC

SHEET IDENTIFICATION
S103
SHEET 6 OF 11

File Name: G:\South Jersey Port Corporation\JOBS\SJP-2401 - Berth 5 Sinkholes\MARINE\DWG\Existing and Proposed Repair.dwg

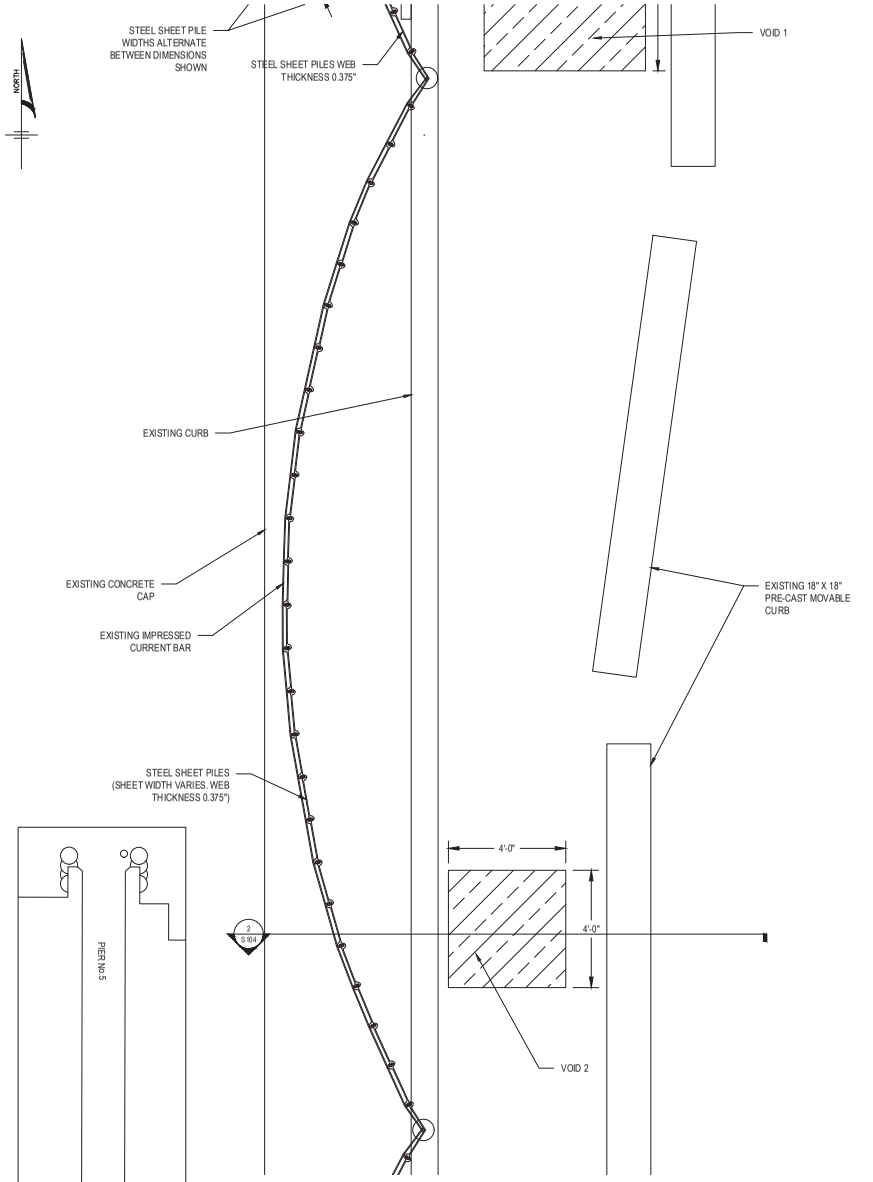

1 S104 VOID 2 PARTIAL PLAN AT C-2N
Scale: 1" = 2'

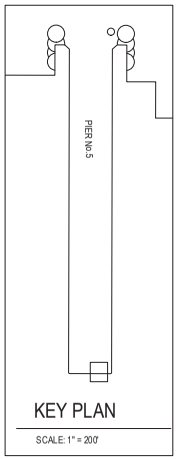

KEY PLAN
SCALE: 1" = 200'

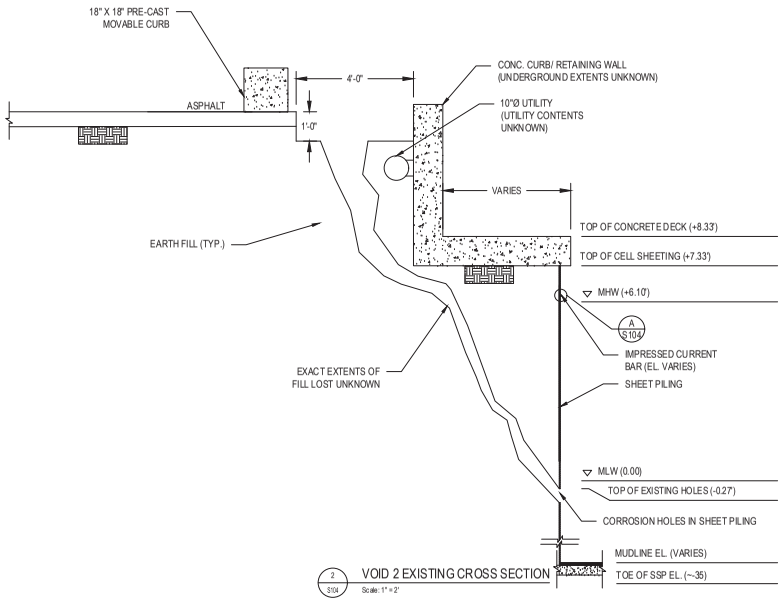

2 S104 VOID 2 EXISTING CROSS SECTION
Scale: 1" = 2'

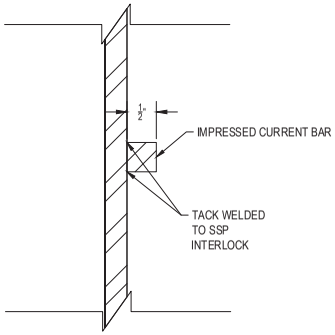

A S104 IMPRESSED CURRENT BAR DETAIL
Scale: 1" = 1'

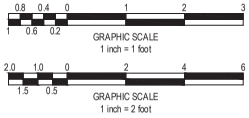

NOTES:

1. SINKHOLE SIZE IS BASED ON THE INSPECTION NOTES OBTAINED DURING THE EMERGENCY INSPECTION PERFORMED ON JUNE 12, 2021 PERFORMED BY MIDATLANTIC ENGINEERING PARTNERS.

ISSUE FOR BID
NOT FOR CONSTRUCTION

No.	DATE	DESCRIPTION	APPROVED B

PROJECT: PIER 5 SINKHOLE AND SHEETPILE REPAIRS - PHASE 2
DRAWING TITLE: VOID 2 PLAN AND CROSS SECTION
PROJECT LOCATION: PIER 5 BROADWAY MARINE TERMINAL, 2370 BROADWAY, CAMDEN, NJ 08104
OWNER/APPLICANT: SOUTH JERSEY PORT CORPORATION, TWO AQUARIUM DRIVE, SUITE 100, CAMDEN, NJ 08103

PROJECT No: SJP-2401
DRAWN BY: HJR
CHECKED BY: WRL
DATE: 1/17/2025

STATE OF NEW JERSEY PATRESSE K. HERRON PE 35E 56595 1/17/2025 Date
PATRESSE HERRON, P.E. PROJECT ENGINEER, MIDATLANTIC ENGINEERING PARTNERS, LLC. PROFESSIONAL ENGINEER

MidAtlantic Engineering Partners
1971 Highway 34, Wall Township, NJ 07719 732-292-0660
20298 Bragg Rd, Suite 300, Mt. Laurel Twp, NJ 08054 856-810-1042
321 W. State Street, Media, PA 19063 610-565-5020
26 Washington St., Suite 201, Morristown, NJ 07960 973-718-9800
Copyright © 2024 MidAtlantic Engineering Partners, LLC

SHEET IDENTIFICATION
S104
SHEET 7 OF 11

File Name: G:\South Jersey Port Corporation\JOBS\SJP-2401 - Berth 5 Sinkholes\MARINE\DWG\Existing and Proposed Repair.dwg

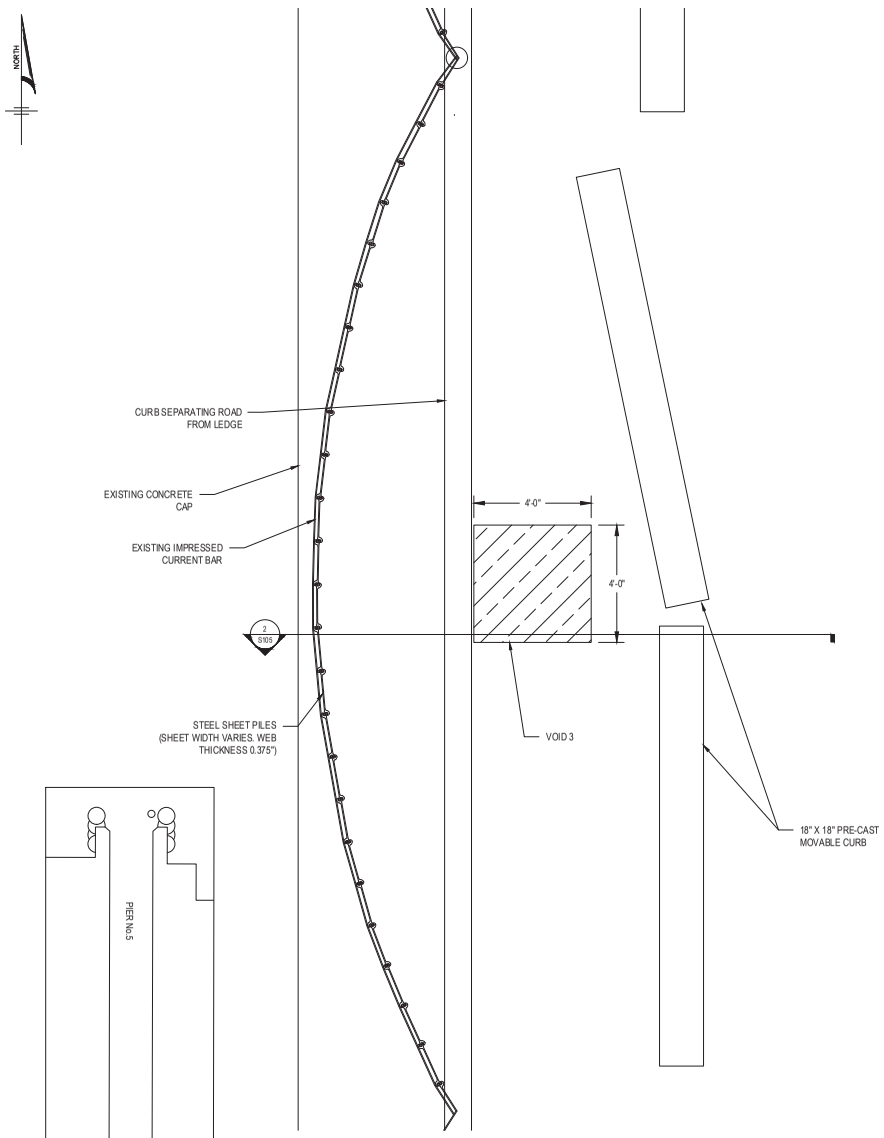

1 S105 VOID 3 PARTIAL PLAN AT C-1NS
Scale: 1" = 2'

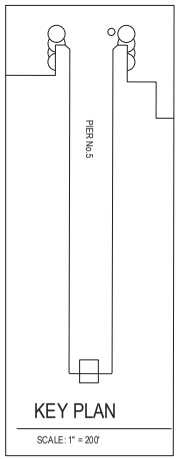

KEY PLAN
SCALE: 1" = 200'

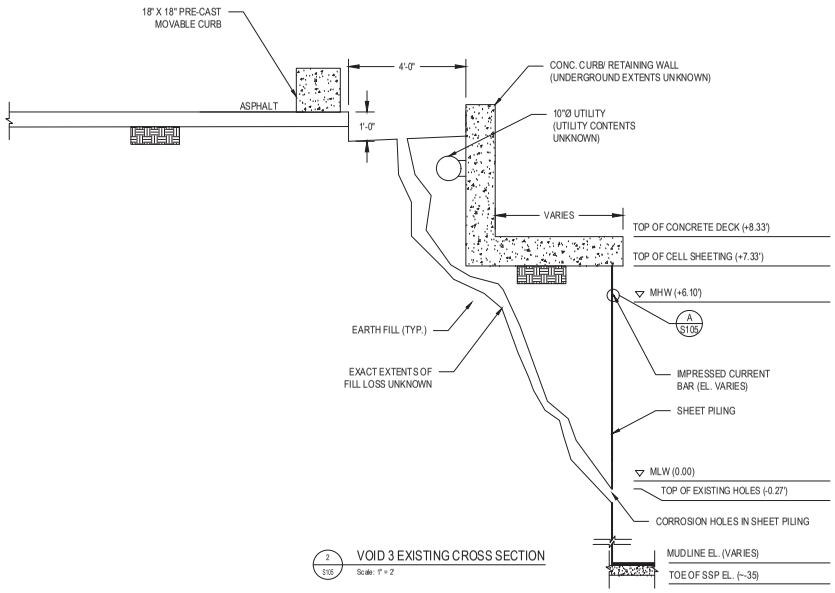

2 S105 VOID 3 EXISTING CROSS SECTION
Scale: 1" = 2'

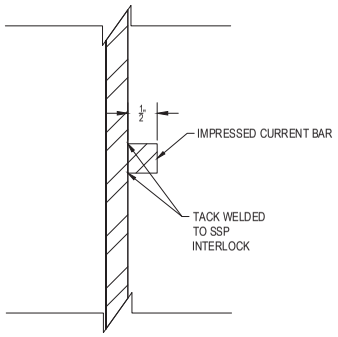

A S105 IMPRESSED CURRENT BAR DETAIL
Scale: 1" = 1'

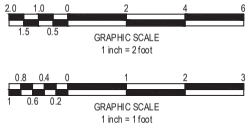

NOTES:

1. SINKHOLE SIZE IS BASED ON THE INSPECTION NOTES OBTAINED DURING THE EMERGENCY INSPECTION PERFORMED ON JUNE 12, 2021 PERFORMED BY MIDATLANTIC ENGINEERING PARTNERS.

ISSUE FOR BID
NOT FOR CONSTRUCTION

No.	DATE	DESCRIPTION	APPROVED B

PROJECT: PIER 5 SINKHOLE AND SHEETPILE REPAIRS - PHASE 2
DRAWING TITLE: VOID 3 PLAN AND CROSS SECTION
PROJECT LOCATION: PIER 5 BROADWAY MARINE TERMINAL 2370 BROADWAY CAMDEN, NJ 08104
OWNER/APPLICANT: SOUTH JERSEY PORT CORPORATION TWO AQUARIUM DRIVE, SUITE 100 CAMDEN, NJ 08103

PROJECT No.: SJP-2401
DRAWN BY: HJR
CHECKED BY: WBL
DATE: 1/17/2025

STATE OF NEW JERSEY
WILLIAM B. HERRON
No. GE56595
1/17/2025
Date
PROFESSIONAL ENGINEER
Professional Engineer Signature

MidAtlantic Engineering Partners
20288 Bragg Rd. Suite 300 Mt. Laurel Twp., NJ 08054 (609) 914-1500
1911 Highway 34, Suite 201 Wall Township, NJ 07719 (732) 556-0500
321 W. State Street Media, PA 19063 610-565-5020
26 Washington St. 3rd Floor Morristown, NJ 07960 973-717-9900
Copyright © 2024 MidAtlantic Engineering Partners, LLC

SHEET IDENTIFICATION
S105
SHEET 8 OF 11

File Name: G:\South Jersey Port Corporation\JOBS\SJP-2401 - Berth 5 Sinkholes\MARINE\DWG\Existing and Proposed Repair.dwg

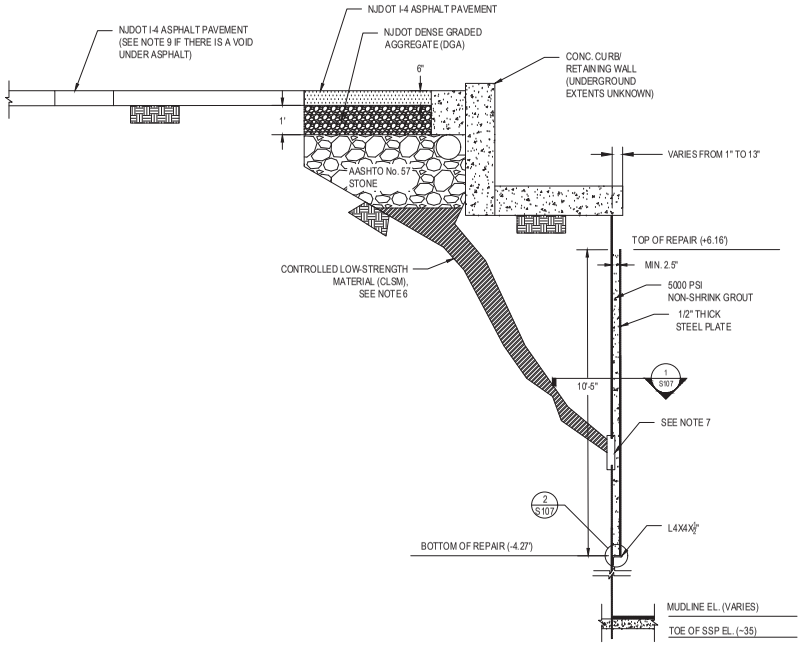

1 S106 PROPOSED TYPICAL REPAIR CROSS SECTION
Scale: 1" = 2'

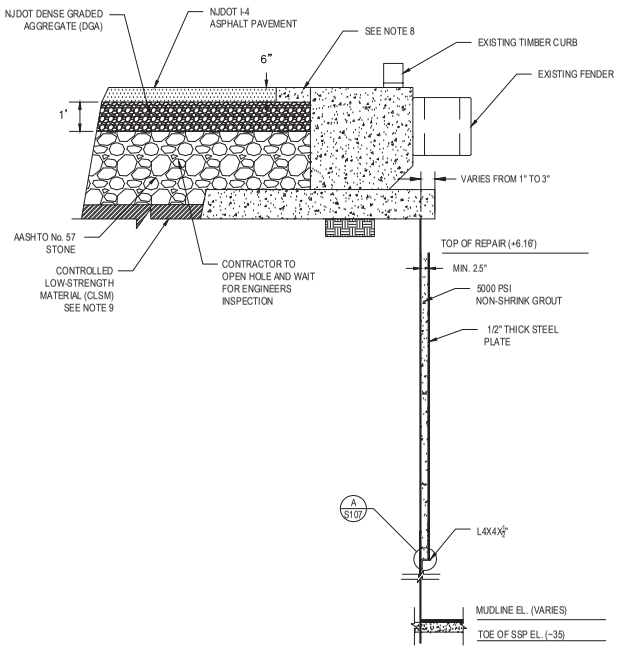

2 S106 PROPOSED TYPICAL VOID REPAIR CROSS SECTION
Scale: 1" = 2'

NOTES:

1. FOR GENERAL NOTES SEE SHEET 2.
2. CLEAN SSP OF CELL IN THE FOOTPRINT OF REPAIRS. CLEAN ALL EXPOSED SURFACES OF MARINE GROWTH, SCALING AND CORROSION USING APPROPRIATE CLEANING EQUIPMENT.
3. IMMEDIATELY PRIOR TO WELDING, THOROUGHLY CLEAN NEW AND EXISTING STEEL SURFACE RECEIVING WELDS OF ALL FOREIGN MATTER INCLUDING MARINE GROWTH, SEDIMENTS, COATINGS, RUST, OIL AND LOOSE MATERIAL FOR A MINIMUM DISTANCE OF 3" ON EACH SIDE OF THE WELD.
4. THE EXISTING CELL IS DETERIORATED. SIGNIFICANT BULGING AND LEANING IS POSSIBLE IN THE EXISTING SSP. STEEL PLATE AND ANGLES SHALL BE FIELD MEASURED AND FIELD TRIMMED TO CONFORM TO CELL HORIZONTAL AND VERTICAL CURVATURE.
5. CONTRACTOR TO REVIEW FIELD CONDITIONS PRIOR TO PROCUREMENT OF MATERIALS. PROCURED QUANTITY AND SIZE OF MATERIAL SHALL BE IN CONSIDERATION OF FIELD CONDITIONS.
6. EXTENT OF VOID MAY EXCEED WHAT IS SHOWN ON THE DRAWING.
7. ANY CORROSION HOLE THAT IS GREATER THAN 5" DIA. MUST TO BE PLUGGED PRIOR TO PLATE INSTALLATION.
8. IF NECESSARY TO REMOVE CONCRETE, REPLACE WITH MINIMUM 4000 PSI CONCRETE TO THE ORIGINAL DIMENSIONS.
9. SUSPECTED VOIDS BELOW THE ASPHALT ARE TO BE FILLED AS FOLLOWS:
   A. BOTTOM OF VOID TO 4' TO THE TOP OF THE ASPHALT - CONTROLLED LOW-STRENGTH MATERIAL (CLSM)
   B. 4' TO 1.5' TO THE TOP OF THE ASPHALT - AASHTO No. 57 STONE
   B. 1.5' TO 0.5' TO THE TOP OF THE ASPHALT - DENSE GRADED AGGREGATE (DGA)
   C. 0.5' TO 0" TO THE TOP OF THE ASPHALT - NJDOT I-4 ASPHALT

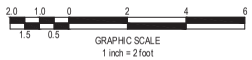

ISSUE FOR BID
NOT FOR CONSTRUCTION

No.	DATE	DESCRIPTION	APPROVED B

PROJECT: PIER 5 SINKHOLE AND SHEETPILE REPAIRS - PHASE 2
DRAWING TITLE: TYPICAL REPAIR CROSS SECTIONS
PROJECT LOCATION: PIER 5 BROADWAY MARINE TERMINAL 2370 BROADWAY CAMDEN, NJ 08104
OWNER/APPLICANT: SOUTH JERSEY PORT CORPORATION TWO AQUARIUM DRIVE, SUITE 100 CAMDEN, NJ 08103

PROJECT No.: SJP-2401
DRAWN BY: HJR
CHECKED BY: WBL
DATE: 1/17/2025

STATE OF NEW JERSEY — WILLIAM B. LEE — NJ LICENSE No. GE56595 — 1/17/2025 Date — PRESENTED FOR PROFESSIONAL CERTIFICATION

MidAtlantic Engineering Partners
20288 Bragg Rd. Suite 300 Mt. Laurel No. NJ 08054 609-910-1500
1817 Highway 34, Suite 201 Wall Township, NJ 07719 732-223-1500
321 W. State Street Media, PA 19063 610-565-0020
26 Washington St. 3rd Floor Morristown, NJ 07960 973-717-9000
Copyright © 2024 MidAtlantic Engineering Partners, LLC

SHEET IDENTIFICATION
S106
SHEET 9 OF 11

File Name: G:\South Jersey Port Corporation\JOBS\SJP-2401 - Berth 5 Sinkholes\MARINE\DWG\Existing and Proposed Repair.dwg

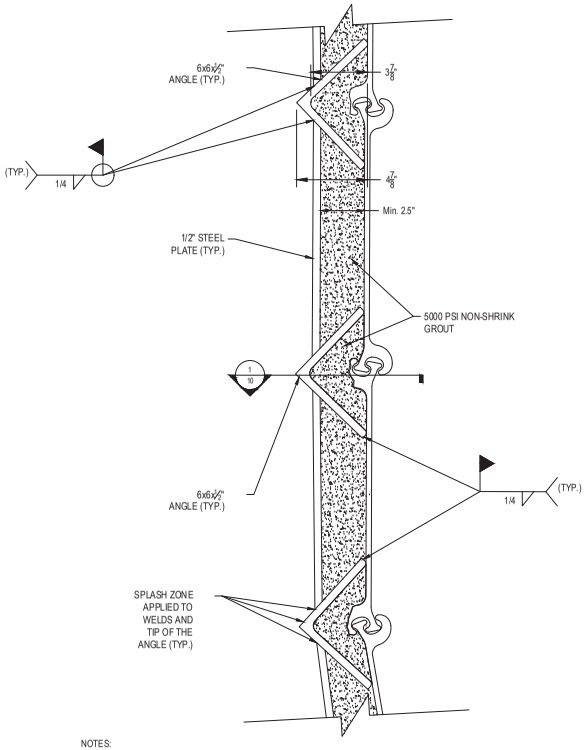

NOTES:
1. IMPRESSED CURRENT BAR TO BE REMOVED AS NECESSARY TO INSTALL 6x6x1/2 ANGLES.
2. STEEL ANGLES ARE TO BE UNCOATED.
3. CONTRACTOR TO POWER WASH ALL SURFACES PRIOR TO INSTALLATION OF REPAIR TO ENSURE SUFFICIENT BOND WITH GROUT.
4. CONTRACTOR MUST TACK WELD VERTICAL PLATES AND ANGLES TO HORIZONTAL L4x4 AS NECESSARY TO PREVENT KICK OUT DURING GROUT FILL.

1 / S107 PROPOSED REPAIR CROSS SECTION
Scale: 3" = 1'-0"

4" 2" 0 0.33 0.66 1
3" 1"
GRAPHIC SCALE
3 inch = 1 feet

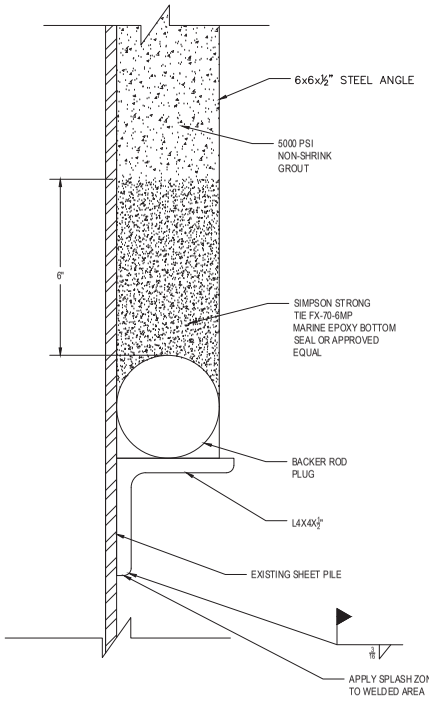

NOTES:
1. BACKER ROD TO BE INSTALLED IN A MANNER THAT WILL CREATE A SEAL ALLOWING NONE OF THE BOTTOM SEAL EPOXY TO ESCAPE.
2. CONTRACTOR MUST TACK WELD VERTICAL PLATES AND ANGLES TO HORIZONTAL L4X4 AS NECESSARY TO PREVENT KICK OUT DURING GROUT FILL.

A / S107 REPAIR DETAIL
Scale: 1" = 2'

2" 0 2" 4" 6"
1"
GRAPHIC SCALE
1 inch = 2 inch

ISSUE FOR BID
NOT FOR CONSTRUCTION

No.	DATE	DESCRIPTION	APPROVED B
–	–	–	
–	–	–	
–	–	–	
–	–	–	
–	–	–	

PROJECT: PIER 5 SINKHOLE AND SHEETPILE REPAIRS - PHASE 2
DRAWING TITLE: REPAIR DETAILS
PROJECT LOCATION: PIER 5 BROADWAY MARINE TERMINAL 2570 BROADWAY CAMDEN, NJ 08104
OWNER/APPLICANT: SOUTH JERSEY PORT CORPORATION TWO AQUARIUM DRIVE, SUITE 100 CAMDEN, NJ 08103

PROJECT No: SJP-2401
DRAWN BY: HJR
CHECKED BY: WRL
DATE: 1/17/2025

STATE OF NEW JERSEY PATRICK K. HERROW No. 24GE05500 Date 1/17/2025 PROFESSIONAL ENGINEER

MidAtlantic Engineering Partners
1571 Highway 34, Suite 201 Wall Township, NJ 07719 732-206-0066
20288 Beggs Rd. Suite 300 Mt. Laurel Twp., NJ 08054 609-910-1400
321 W. State Street Media, PA 19063 610-565-5020
26 Washington St. 3rd Floor Morristown, NJ 07960 973-718-9800
Copyright © 2024 MidAtlantic Engineering Partners, LLC

SHEET IDENTIFICATION
S107
SHEET 10 OF 11

File Name: G:\South Jersey Port Corporation\JOBS\SJP-2401 - Berth 5 Sinkholes\MARINE\DWG\Existing and Proposed Repair.dwg

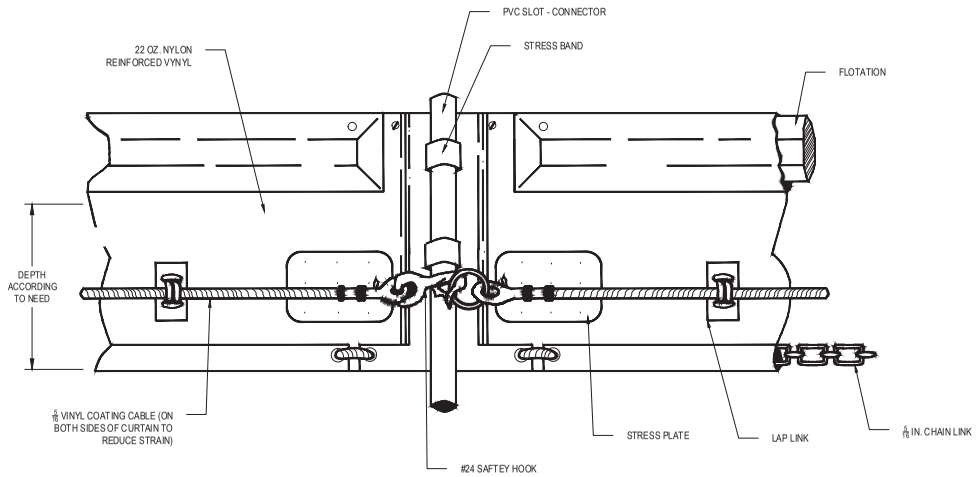

1 / S108 TURBIDITY CURTAIN DETAIL

Scale: NOT TO SCALE

NOTE: ANCHORING WITH BUOYS, AS SHOWN, REMOVES ALL VERTICAL FORCES FROM THE CURTAIN. HENCE, THE CURTAIN WILL NOT SINK FROM WIND OR CURRENT LOADS.

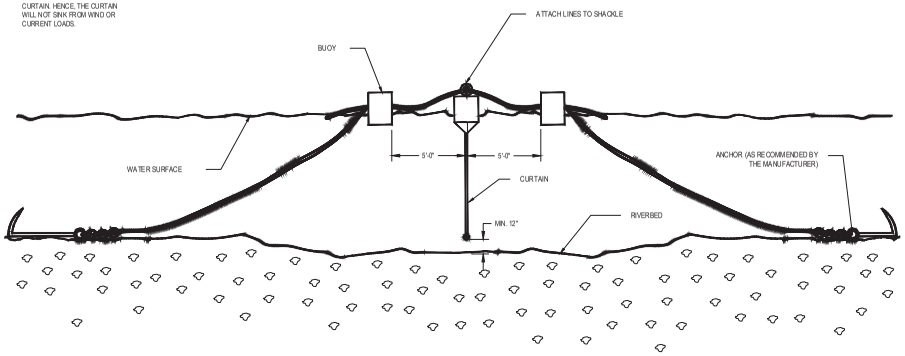

2 / S108 ORIENTATION WHEN INSTALLED

Scale: 1/4"=1'-0"

ISSUE FOR BID

NOT FOR CONSTRUCTION

No.	DATE	DESCRIPTION	APPROVED B

PROJECT: PIER 5 SINKHOLE AND SHEETPILE REPAIRS - PHASE 2

DRAWING TITLE: TURBIDITY CURTAIN DETAIL

OWNER/APPLICANT: SOUTH JERSEY PORT CORPORATION, TWO AQUARIUM DRIVE, SUITE 100, CAMDEN, NJ 08103

PROJECT LOCATION: PIER 5 BROADWAY MARINE TERMINAL, 2570 BROADWAY, CAMDEN, NJ 08104

PROJECT No.: SJP-2401

DRAWN BY: HJR

CHECKED BY: WRL

DATE: 1/17/2025

STATE OF NEW JERSEY, WILLIAM R. HERRON, LICENSE No. 45565, 1/17/2025, Date, Professional Engineer Signature

MidAtlantic Engineering Partners

20288 Beggs Rd. Suite 300, Mt. Laurel Twp., NJ 08054, 609-914-0476

1571 Highway 34, Suite 201, Wall Township, NJ 07719, 732-223-1466

321 W. State Street, Media, PA 19063, 610-565-0520

26 Washington St., 3rd Floor, Morristown, NJ 07960, 973-718-9800

Copyright © 2024 MidAtlantic Engineering Partners, LLC

SHEET IDENTIFICATION

S108

SHEET 11 OF 11

File Name: G:\South Jersey Port Corporation\JOBS\SJP-2401 - Berth 5 Sinkhole\MARINE\DWG\Cover Page.dwg